ERSATZTEILLISTE
OKIJET 300

M-OSD-10014-10

ERSATZTEILLISTE OKIJET 300

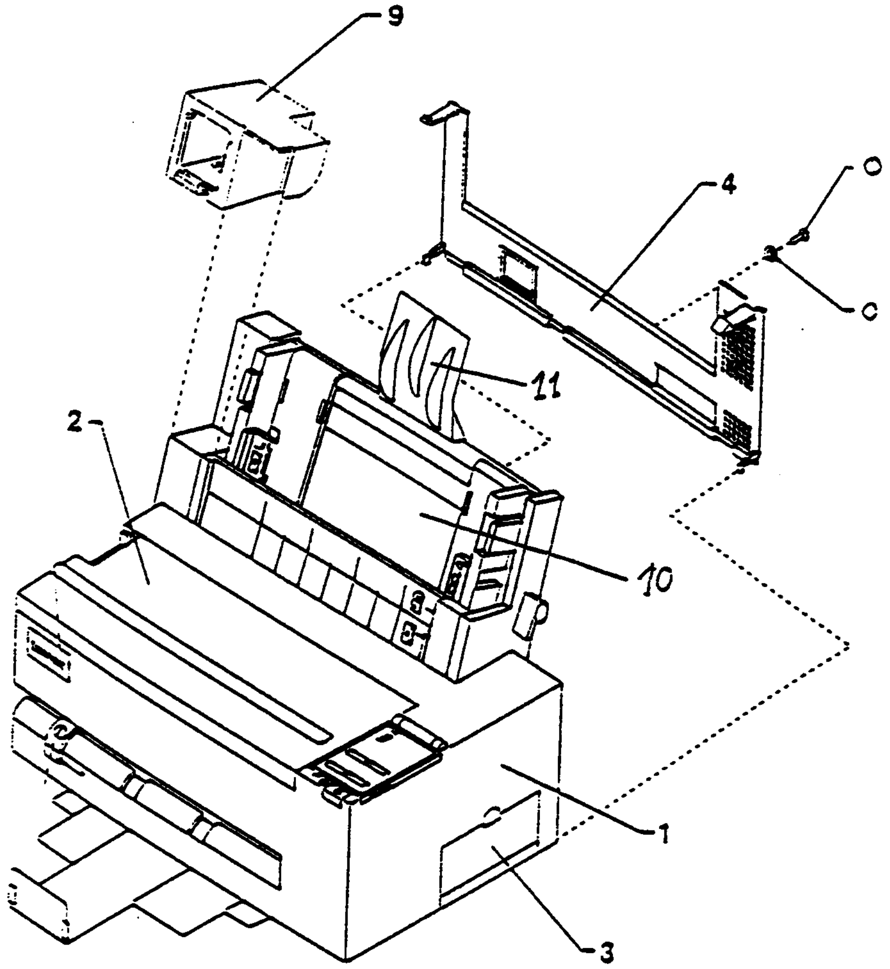

NR.	BEZEICHNUNG	BESTELL-NR.
1	TOP COVER INCL. LOGO / OP. P. DOOR	1367099
2	ACCESS COVER ASSY	1367487
3	FRONT CARD DOOR	1367486
4	REAR COVER	1367479
9	PRINT CARTRIDGE STORAGE	1425698
10	AUTO SHEET FEED ASSY	1369999
11	UPPER PAPER SUPPORT	1367439
0	PARTS PACK	1367169

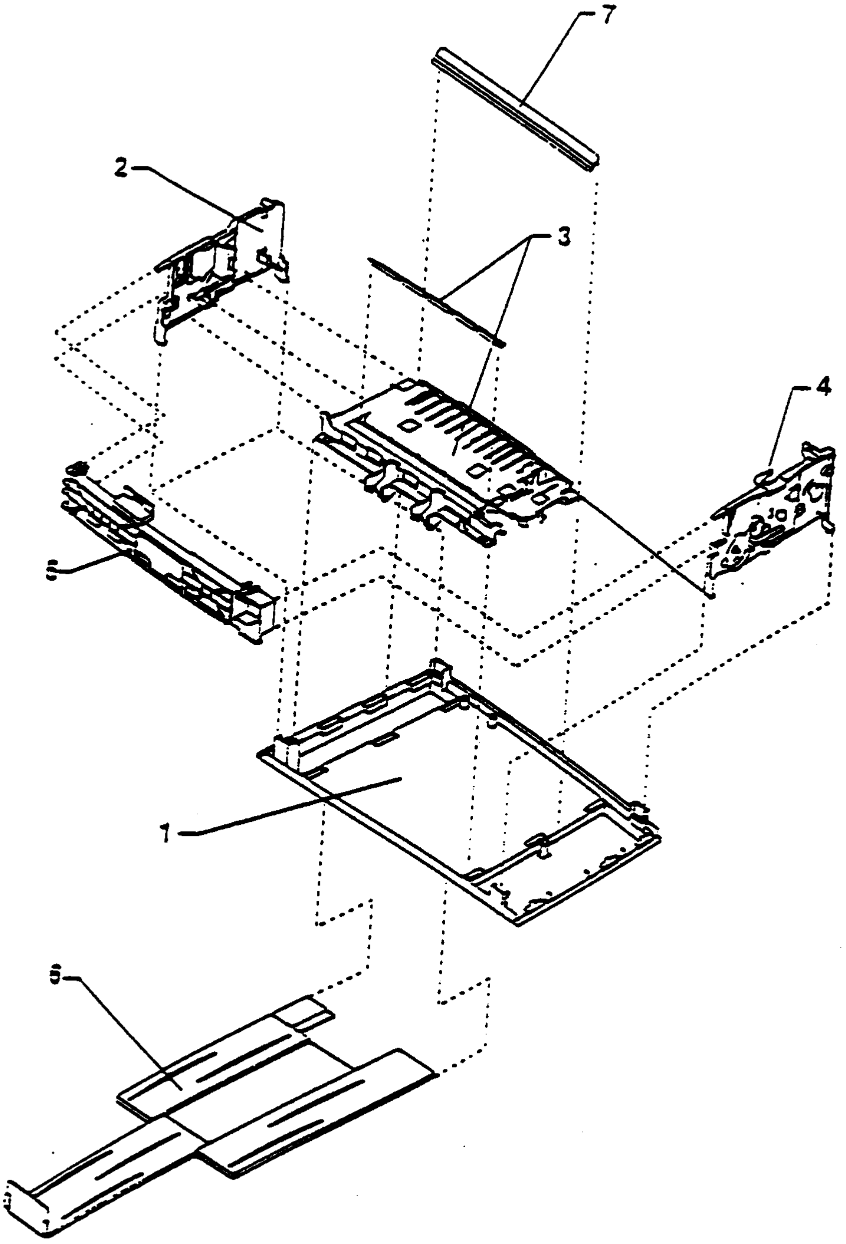

NR.	BEZEICHNUNG	BESTELL-NR.
1	BASE ASSY (INCL.NO. 9, 10)	1367489
2	LEFT SIDE FRAME	1367209
3	MIDDLE FRAME ASSY (INCL. NO.8 MAINT. STATION)	1367219
4	RIGHT SIDE FRAME ASSY (INCL. NO. 10-12)	1367229
5	CARR. TR. MOTOR FRAME ASSY (INCL. NO. 1, 3-7)	1367309
6	EXIT TRAY ASSY	1367199
7	CARRIER GUIDE	1367079

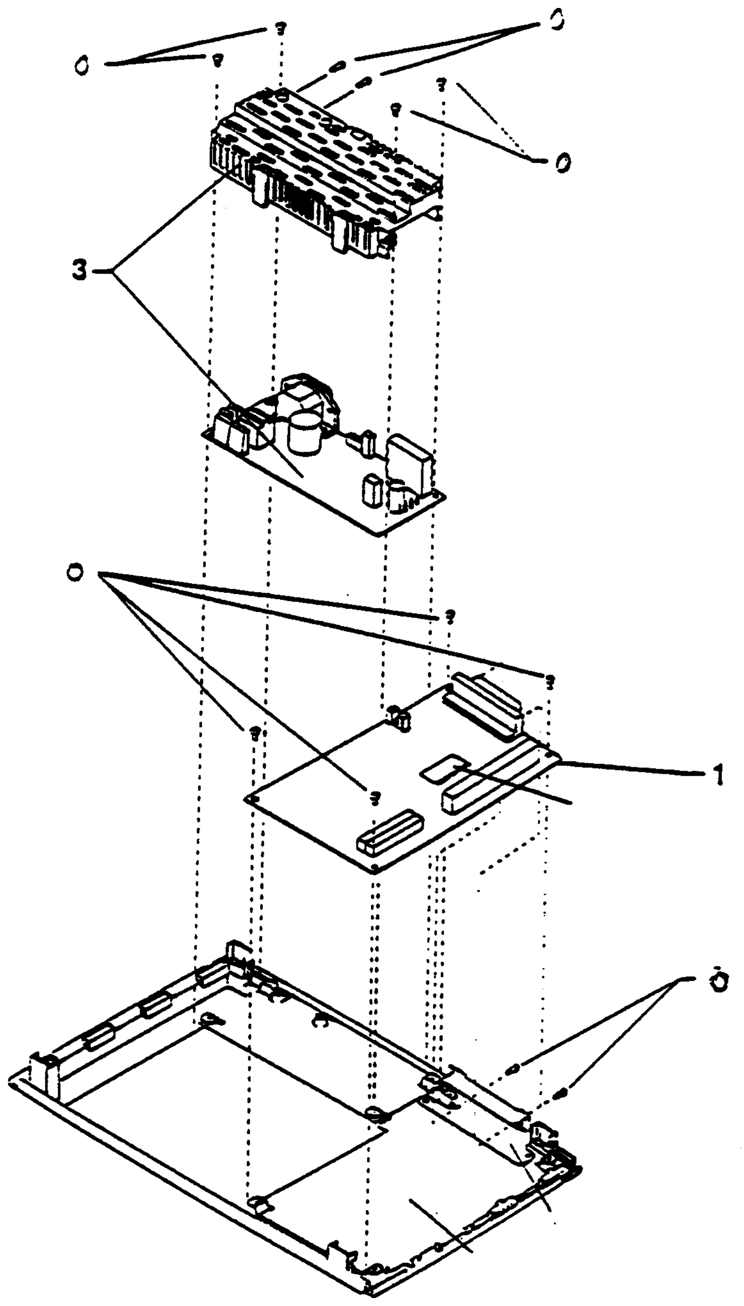

NR.	BEZEICHNUNG	BESTELL-NR.
1	SYSTEM BOARD W/O EPROM	1375419
3	POWER SUPPLY	1367189
0	PARTS PACK	1367169

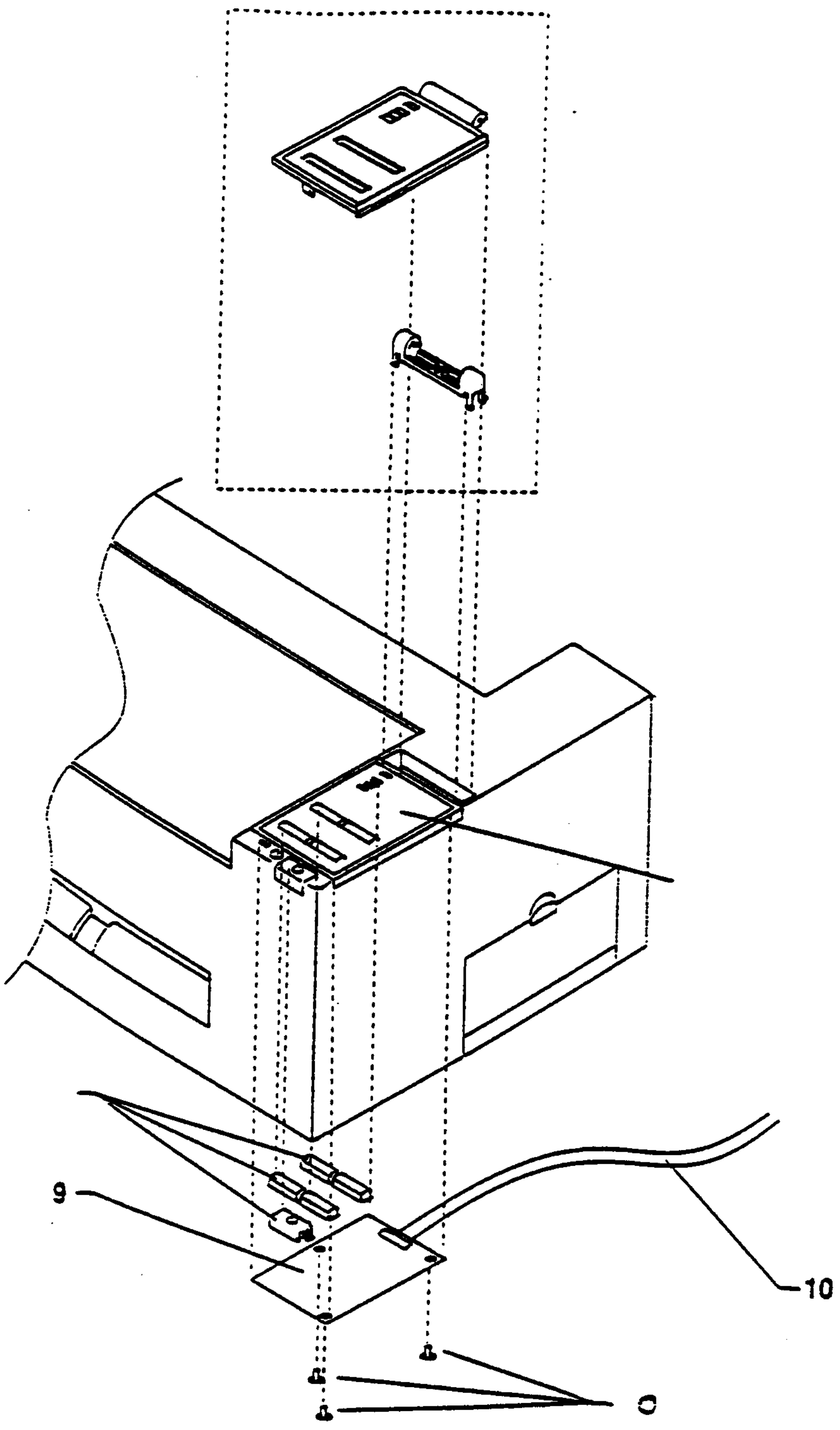

NR.	BEZEICHNUNG	BESTELL-NR.
9	OPERATOR PANEL CARD (INCL. NO. 10)	1367129
0	PARTS PACK	1367169

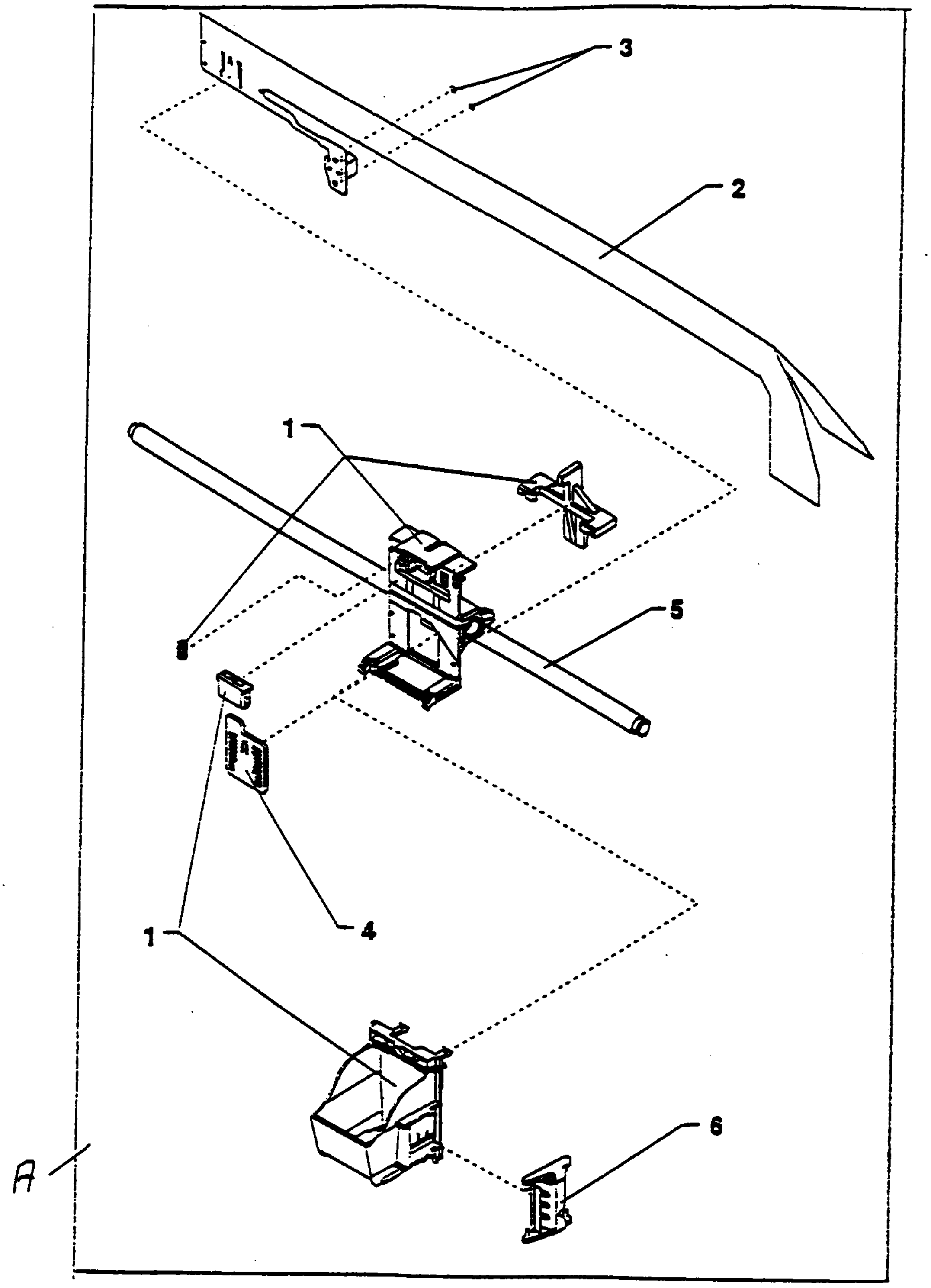

NR.	BEZEICHNUNG	BESTELL-NR.
A	PRINT HEAD CARRIER ASSY (INCL. NO. 1-6)	139999

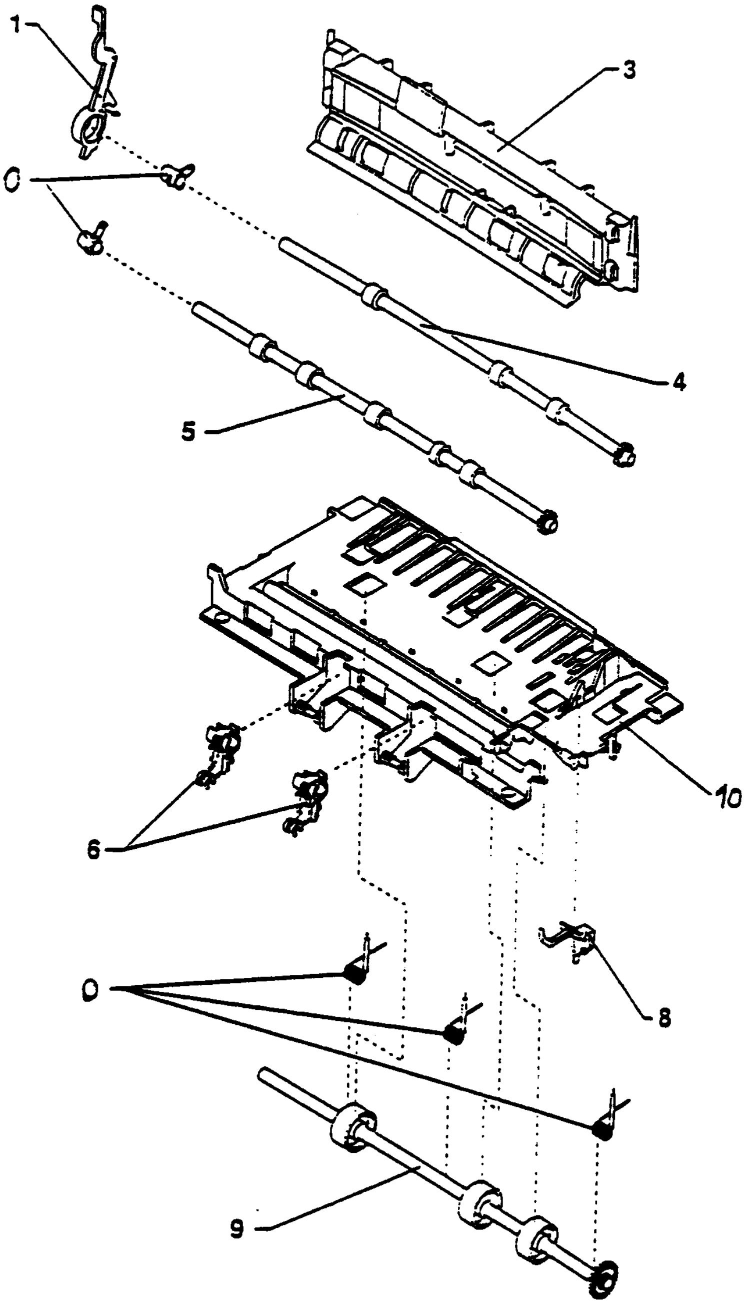

NR.	BEZEICHNUNG	BESTELL-NR.
1	PAPER RELEASE LEVER	1367179
3	PAPER GUIDE	1367339
4	SMALL FEED ROLLER ASSY	1367279
5	EXIT ROLLER ASSY	1367289
6	EJECTOR B/M	1367266
9	LARGE FEED ROLLER ASSY	1367269
10	MIDDLE FRAME ASSY (INCL. NO. 8)	1367219
0	PARTS PACK	1367169